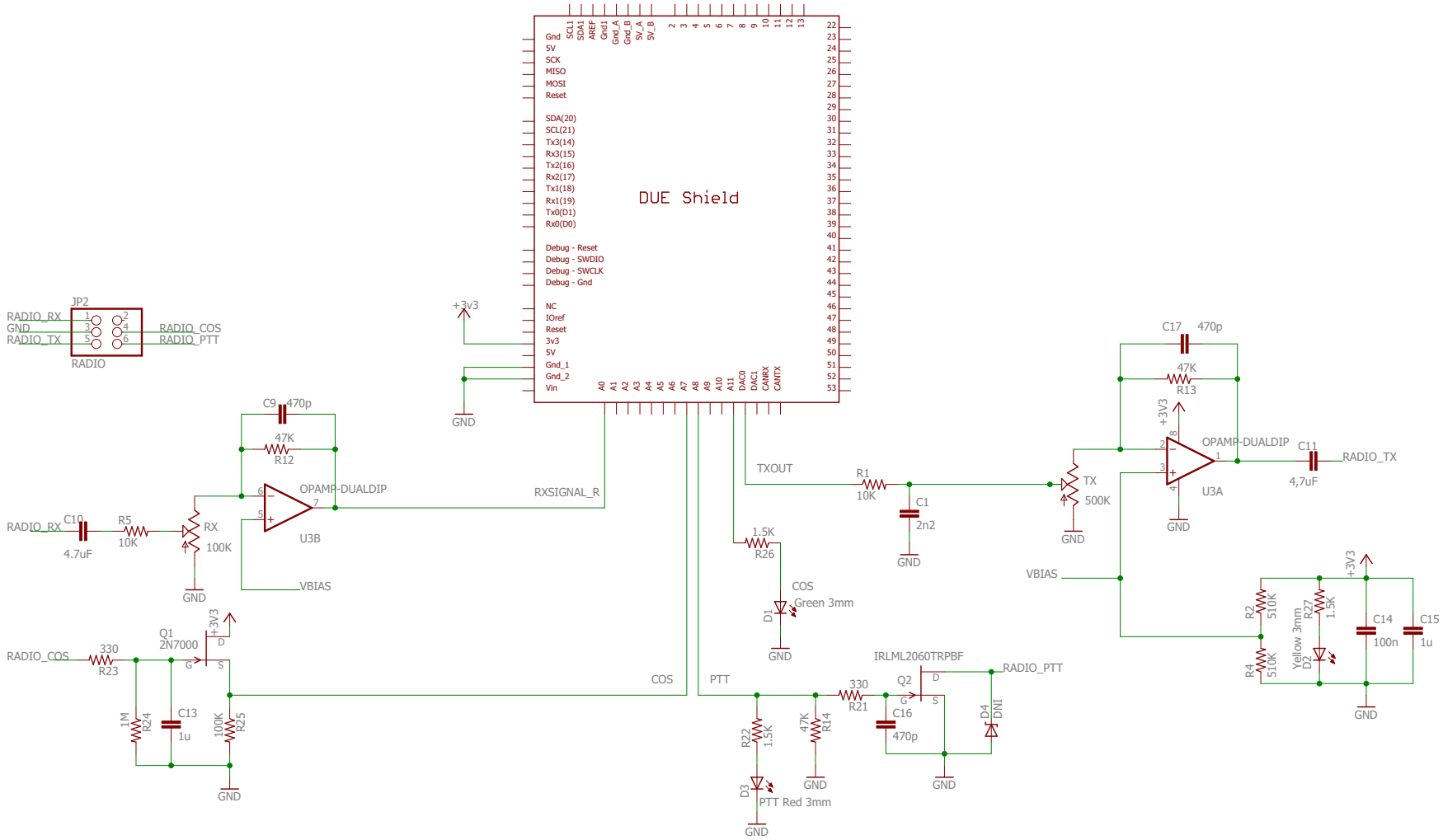

DVforArduino v0.04

13-10-2015 00:07

Sheet: 1/1